9462-78 Flat Rail Stick Strap
Installation Instructions
I-SD00255

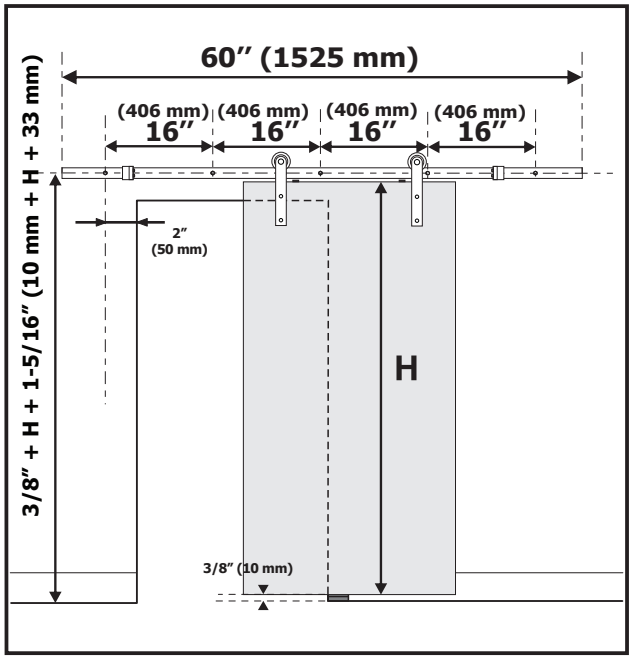

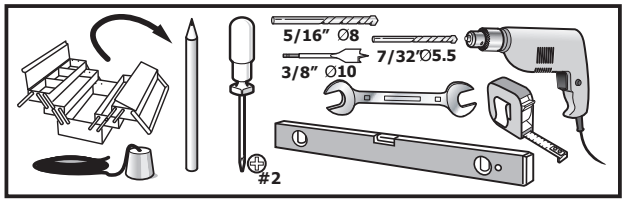

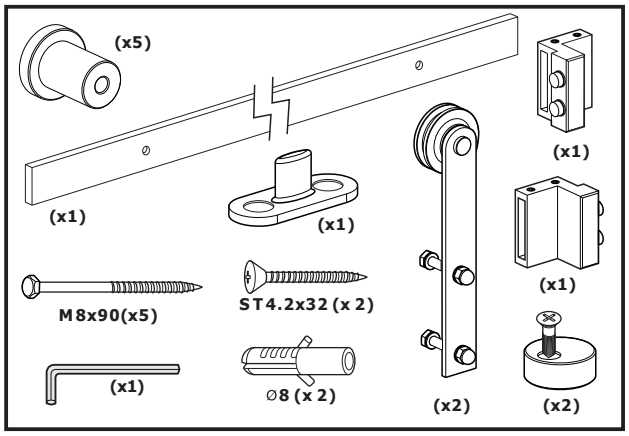

To obtain the maximum weight capacity, all fasteners must be mounted securely into solid wood of studs or blocking within the wall or wood mounted to the face of the wall.

1

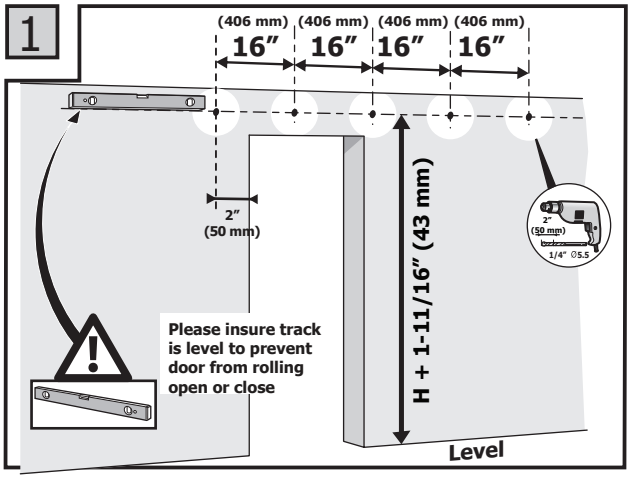

2

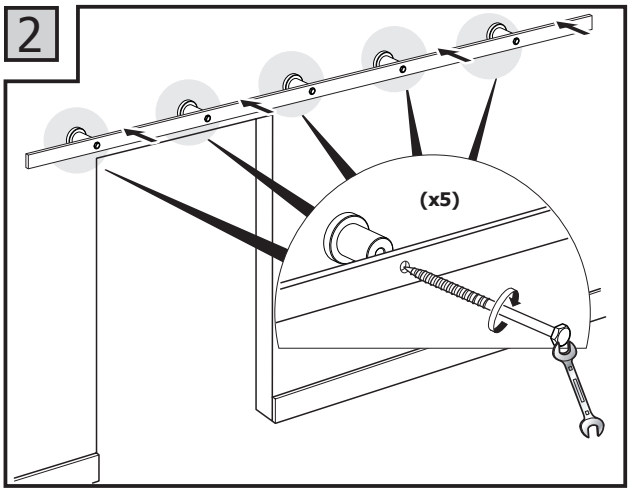

3

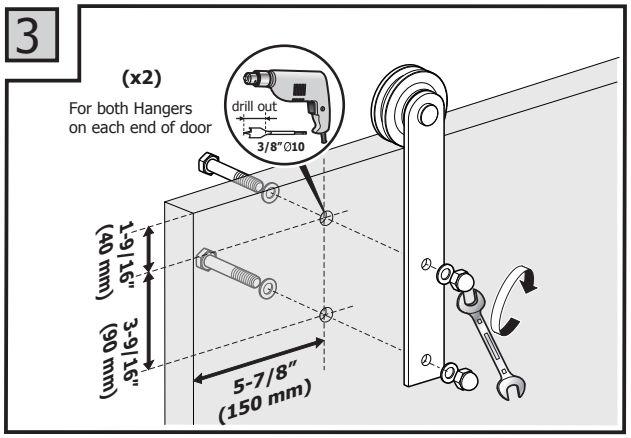

4

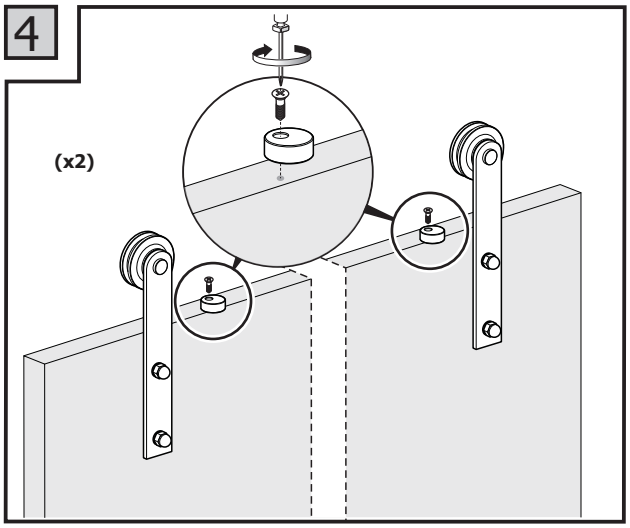

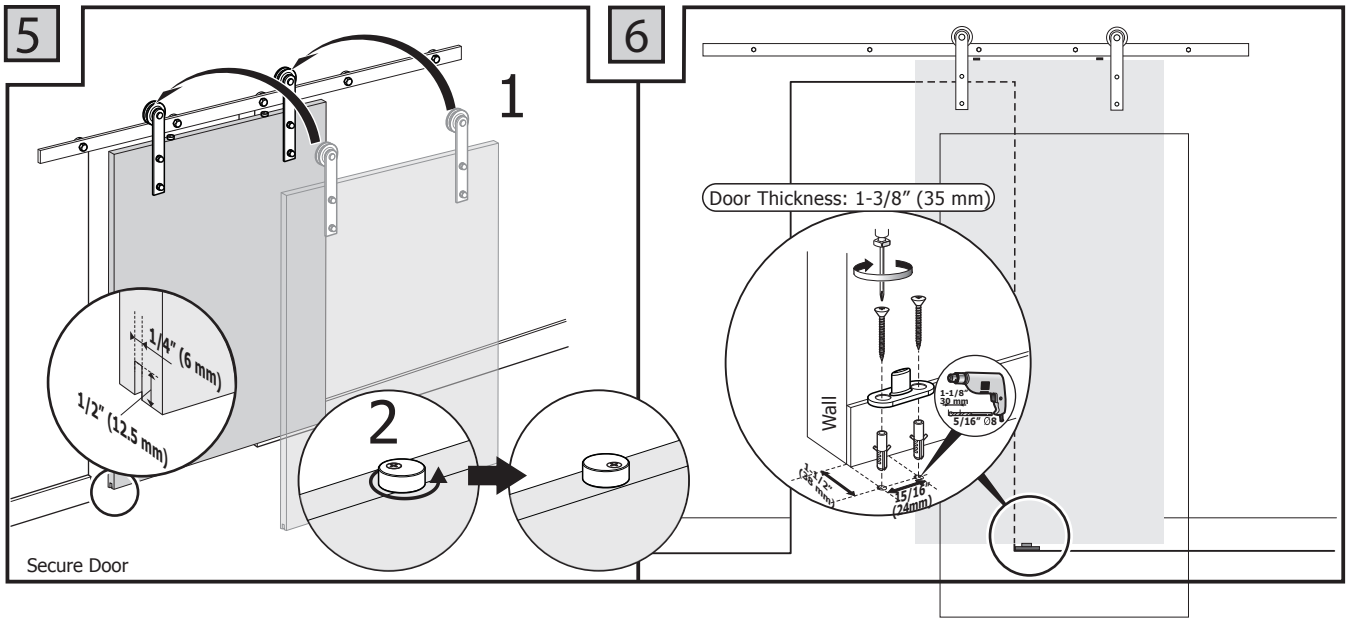
5
1
2
1/4" (6 mm)
1/2" (12.5 mm)
Secure Door
6
Door Thickness: 1-3/8" (35 mm)
Wall
1-1/8"
30 mm
5/16" Ø8
15/16"
(24mm)

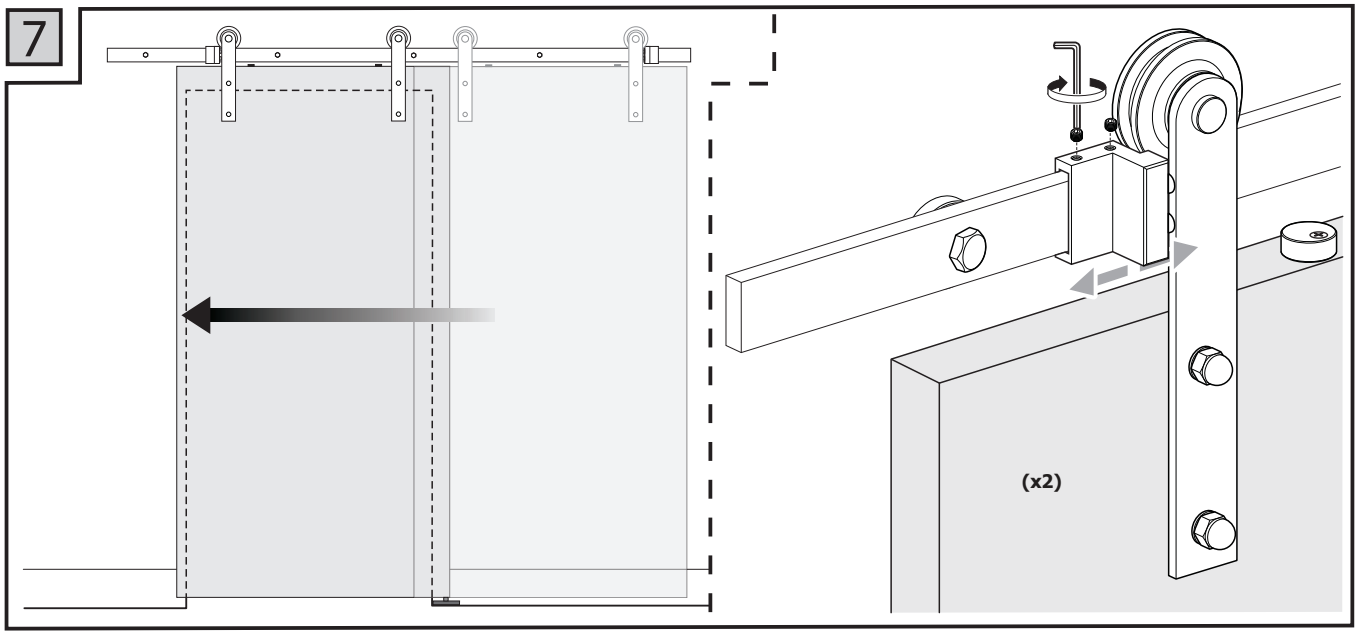
7
(x2)