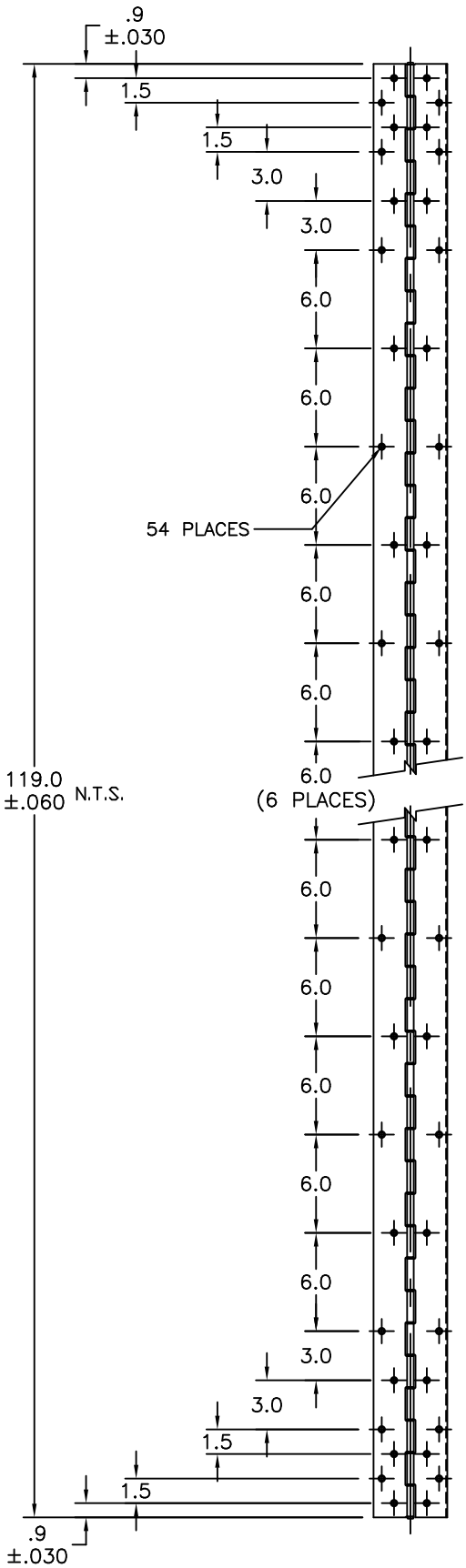

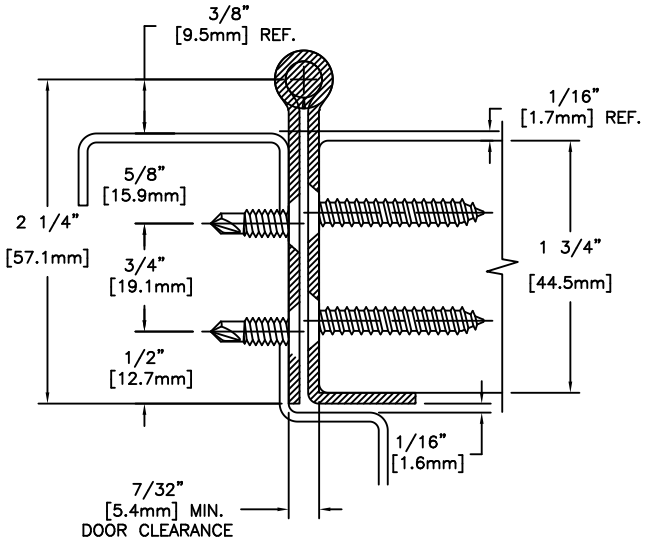

APPLICATION

SCALE: 3/4

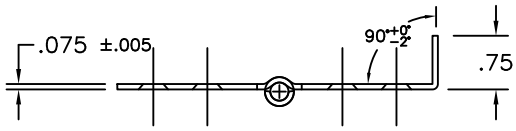

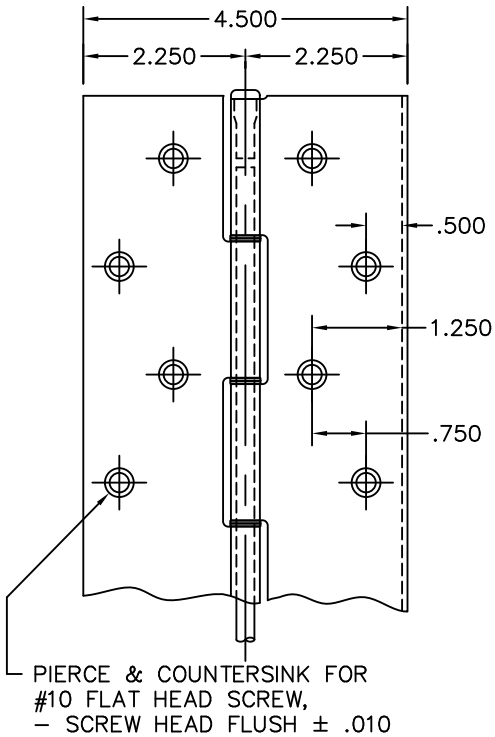

HOLE PATTERN DETAIL

SCALE: 3/8

NOTES:

- MATERIAL: .075 STAINLESS STEEL #304–2B FINISH
- ALL DIMENSIONS ARE IN INCHES
- DRAWINGS ARE NOT TO SCALE
- KNUCKLE PATTERN MY VARY

DET	QTY	SH	STOCK SIZE	MAT'L	REMARKS

Bill of Material

TOLERANCE (UNLESS NOTED)
.X = ± .060
.XX = ± .030
.XXX = ± .015
ANGLE = ± 2°
FRACTION = ± 1/32
REMOVE ALL BURRS
BREAK SHARP EDGES .010 MAX

REVISIONS

HAGER COMPANIES
HAGER – MODEL 790–915 – 119"
CONTINUOUS STAINLESS STEEL HINGE

DATE 08–18–03 DR. KBJ SCALE AS NOTED
FILENAME z:\stainless\templates\790915–119.dwg
DRAWING NO. 790–915 – 119"